Safety detection solutions

Safety interlock switches

Key-operated with solenoid, turret head
XCSLF and XCSLE slim design

XCSLF metal

Safety interlock switches operated by actuating key

Pages 56 and 57

With emergency release mushroom head pushbutton

Pages 58 and 59

XCSLE plastic

Safety interlock switches operated by actuating key

Pages 60 and 61

Safety detection solutions

Safety interlock switches

Key-operated with solenoid, turret head
XCSLF and XCSLE slim design

Environmental characteristics

Safety interlock switch type		XCSLF (metal)	XCSLE (plastic)
Conformity to standards	Products	EN/IEC 60947-5-1, EN/ISO 13849-1, EN/IEC 62061, UL 508, CSA C22-2 no. 14	
	Machine assemblies	EN/IEC 60204-1, EN/ISO 14119, EN/ISO 12100	
Product certifications		UL, CSA, CCC, EAC	
Maximum safety level *(1)*		PL=e, category 4 conforming to EN/ISO 13849-1 and SIL CL3 conforming to EN/IEC 62061	
Reliability data B_{10D}		5,500,000 (value given for a service life of 20 years, limited by mechanical or contact wear)	
Ambient air temperature	For operation	-25 ...+60 °C	
	For storage	-40…+70 °C	
Vibration resistance		5 gn (10…500 Hz) conforming to EN/IEC 60068-2-6	
Shock resistance		10 gn (duration 11 ms) conforming to EN/IEC 60068-2-27	
Electric shock protection	Conforming to EN/IEC 61140	Class I (cable entries)	Class II (cable entries)
		Class I (M23 connector, 19 pins)	
Degree of protection		IP 65 (XCSL●●●●●●M3, versions with M23 connector) IP 66 and IP 67 (IP 66 for XCSLF●●●●4●● and for XCSLF●●●●6●●) conforming to EN/IEC 60529 and EN/IEC 60947-5-1 *(2)*	
Connection		3 cable entries tapped M20 x 1.5 for ISO cable gland. Clamping capacity 7 to 13 mm or entries tapped for 1/2" NPT conduit or M23 19-pin connector output (18+1PE) 24 V ⎓ versions.	
Material		Zamak case	Polyamide case
		Actuating keys (all types): steel XC60, surface treated	

(1) Using an appropriate and correctly connected safety control unit.

(2) Live parts of these switches are protected to some extent against the penetration of dust and water. However, when installing take all necessary precautions to help prevent the penetration of solid bodies, or liquids with a high dust content, into the actuating key aperture. Use of XCSZ30 blanking plugs for unused key slots can reduce the penetration of unwanted elements (one blanking plug is delivered with the product). Not recommended for use in saline atmospheres.

Contact block characteristics

Safety interlock switch type	**XCSLF●●●●●12** and **XCSLE●●●●●12** (versions with 3 cable entries)	**XCSLF●●●●●●M3** and **XCSLE●●●●●●M3** (versions with M23 connector)
Rated operational characteristics	AC-15 ∿, C300: Ue = 240 V, Ie = 0.75 A DC-13 ⎓, R300: Ue = 250 V, Ie = 0.1 A conforming to EN/IEC 60947-5-1	∿ AC-15, C300: Ue = 24 V, Ie = 1.5 A ⎓ DC-13, R300: Ue = 24 V, Ie = 0.22 A conforming to EN/IEC 60947-5-1
Conventional thermal current in enclosure	Ithe = 4 A (sum of the thermal currents ≤ 15 A)	
Rated insulation voltage	Ui = 250 V degree of pollution 3 conforming to EN/IEC 60947-1 Ui = 300 V conforming to UL 508, CSA C22-2 no. 14	Ui = 60 V degree of pollution 3 conforming to EN/IEC 60947-1 Ui = 50 V conforming to UL 508, CSA C22-2 no. 14
Rated impulse withstand voltage	Uimp = 4 kV conforming to EN/IEC 60947-1	Uimp = 0.8 kV conforming to EN/IEC 60947-1
Positive operation	Contacts with positive opening operation conforming to EN/IEC 60947-5-1	
Minimum switching current	10 mA at 20 V	
Minimum switching voltage	17 V	
Short-circuit protection	4 A cartridge fuse gG (gI) or 6 A fast-blow fuse	
Connection	Clamping capacity on spring terminals: 2 x 0.5 mm² stripped flexible cables, 13 mm long 1 x 1.5 mm² flexible or rigid cable	

Additional characteristics

Actuation speed	Maximum: 0.5 m/s, minimum: 0.01 m/s
Resistance to forcible withdrawal of actuating key (locked)	**XCSLF**: F_{1max} = 3000 N, F_{Zh} = 2300 N **XCSLE**: F_{1max} = 1400 N, F_{Zh} = 1100 N
Shock resistance	**XCSLE**: 1.2 J max. or 4.9 J depending on installation (see page 22) **XCSLF**: 6.4 J max. or 9.6 J (see page 22)
Mechanical durability	**XCSLF** and **XCSLE:** > 1 million operating cycles Emergency release mushroom head pushbutton on **XCSLF**: 30,000 operating cycles
Maximum operating rate	For maximum durability: 600 operating cycles per hour
Minimum force for extraction of actuating key (not locked)	≥ 20 N

Additional characteristics (continued)

Electrical durability

- Conforming to EN/IEC 60947-5-1 Appendix C
- Utilization categories AC-15 and DC-13
- Maximum operating rate: 3,600 operating cycles/hour
- Load factor: 0.5

AC supply
50/60 Hz ∼
inductive circuit

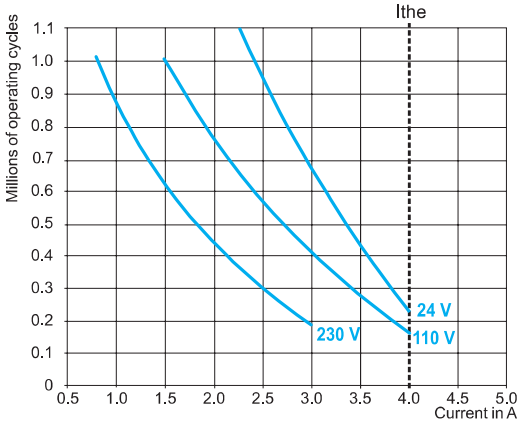

DC supply ⎓
Power broken for 1 million operating cycles

Voltage	**V**	**24**	**48**	**120**
inductive circuit	**W**	16	28	38

Switching capacity

- Conforming to EN/IEC 60947-5-1 Appendix C
- Utilization categories AC-15 and DC-13

Switching capacity 1:
C300 240 V 0.75 A
R300 250 V 0.1 A

Switching capacity 2:
C300 120 V 1.5 A
R300 125 V 0.22 A

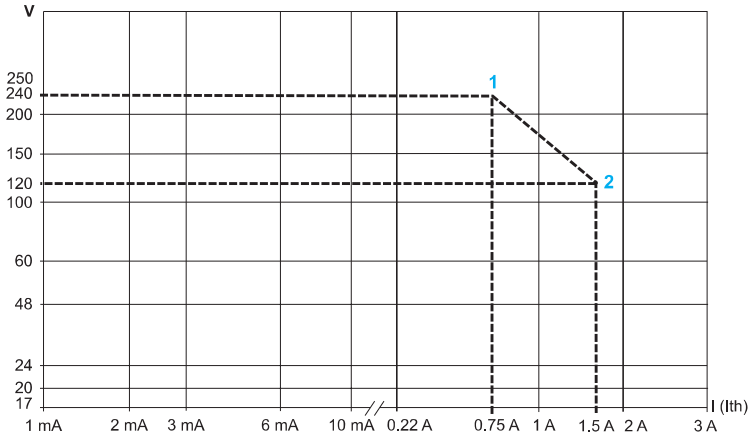

Safety detection solutions

Safety interlock switches

Key-operated with solenoid, turret head *(1)*
XCSLF metal, 3 cable entries

Type of switch	Locking on de-energization and unlocking on energization of solenoid *(2)*				
					
LED indication	Orange LED: "guard open" indication Green LED:"guard closed and locked" indication				
Power supply for the solenoid and the LEDs	24 V ⎓ or ∿ (50/60 Hz on ∿)				
Type of auxiliary contact actuated by the solenoid (locking contacts). Contact states represented with actuating key inserted and solenoid not energized.	1 NC + 1 NO break before make 33 41 / 34 42	2 NC simultaneous 31 41 / 32 42	1 NC + 2 NO break before make 61 43 53 / 62 44 54	2 NC + 1 NO break before make 41 51 63 / 42 52 64	3 NC simultaneous 41 51 61 / 42 52 62
References of switches without actuating key *(3)* **(⊖ NC contact with positive opening operation)** **Types of main contact actuated by the key** **Contact states represented with actuating key inserted** **With 3 cable entries tapped ISO M20 x 1.5**					
2-pole contact **1 NC + 1 NO** break before make, slow break 13 21 / 14 22	**XCSLF2525312** ⊖	–	–	–	–
2-pole contact **2 NC** simultaneous, slow break 11 21 / 12 22	**XCSLF2725312** ⊖	**XCSLF2727312** ⊖	–	–	–
3-pole contact **1 NC + 2 NO** break before make, slow break 21 13 33 / 22 14 34	–	–	**XCSLF3535312** ⊖	–	–
3-pole contact **2 NC + 1 NO** break before make, slow break 21 31 13 / 22 32 14	–	–	–	**XCSLF3737312** ⊖	–
3-pole contact **3 NC** simultaneous, slow break 11 21 31 / 12 22 32	–	–	–	–	**XCSLF3838312** ⊖
Weight (kg)	1.100	1.100	1.100	1.100	1.100

Solenoid and LED characteristics

Load factor		100%
Rated operational voltage *(4)*		24 V ⎓ or ∿ or 120 V ∿ or 230 V ∿
Voltage limits	Conforming to EN/IEC 60947-1	- 15%, + 10% of the rated operational voltage (including ripple on ⎓)
Consumption		< 5.4 W at 20 °C and max. voltage

References of complete switches with solenoid supply voltage of 120 V or 230 V

To order a switch with a solenoid voltage of 110/120 V ∿, replace the sixth number in the selected reference with **3**.
Example: XCSLF3535312 becomes **XCSLF3535332**. Some 110/120V ∿ references may not be available.
To order a switch with a solenoid voltage of 220/240 V ∿, replace the sixth number in the selected reference with **4**.
Example: XCSLF3535312 becomes **XCSLF3535342**. Some 220/240V ∿ references may not be available.

References of switches with locking on energization and unlocking on de-energization

To order a safety interlock switch with locking on energization and unlocking on de-energization of the solenoid, replace the fifth number in the selected reference with **5**. For these models, the auxiliary contact states are represented with key inserted and solenoid energized.
Example: XCSLF3535312 becomes **XCSLF3535512**. Some references with locking on energization may not be available.

References of complete switches with 3 cable entries tapped for 1/2" NPT conduit

To order a switch with three 1/2" NPT cable entries, replace the last number in the reference with **3**.
Example: XCSLF3535312 becomes **XCSLF3535313.** Some 1/2" NPT references may not be available.

References of actuating keys and separate parts

See page 64.

(1) Head adjustable in 90° steps through 360°. Blanking plug for operating head slot included with switch.
(2) A key-operated lock (2 keys included with switch) enables forced opening of the interlocking mechanism by authorized personnel, allowing withdrawal of the actuating key and subsequent opening of the NC safety contacts (auxiliary release).
(3) Actuating keys to be ordered separately (see page 64).
(4) Common power supply for the solenoid and the LEDs.

Other versions: consult your Customer Care Center.

Presentation: page 54 | Characteristics: page 55 | Dimensions: page 65 | Schemes: page 68

Safety detection solutions

Safety interlock switches

Key-operated with solenoid, turret head *(1)*
XCSLF metal, connector output

Type of switch	Locking on de-energization and unlocking on energization of solenoid *(2)*		
			
LED indication	Orange LED: "guard open" indication Green LED: "guard closed and locked" signaling		
Power supply for the solenoid and the LEDs	24 V ⎓ or ∿ (50/60 Hz on ∿)		
Type of auxiliary contact actuated by the solenoid (locking contacts). Contact states represented with actuating key inserted and solenoid not energized.	1 NC + 2 NO break before make 	2 NC + 1 NO break before make 	3 NC simultaneous 

References of switches without actuating key *(3)* (⊖ NC contact with positive opening operation)
Types of main contact actuated by the key
Contact states represented with actuating key inserted
With 19-pin (6 contacts) M23 connector output

3-pole contact **1 NC + 2 NO** break before make, slow break 	**XCSLF353531M3** ⊖	–	–
3-pole contact **2 NC + 1 NO** break before make, slow break 	–	**XCSLF373731M3** ⊖	–
3-pole contact **3 NC** simultaneous, slow break 	–	–	**XCSLF383831M3** ⊖
Weight (kg)	1.100	1.100	1.100

Solenoid and LED characteristics

Load factor		100%
Rated operational voltage *(4)*		24 V ⎓ or ∿
Voltage limits	Conforming to EN/IEC 60947-1	- 15%, + 10% of the rated operational voltage (including ripple on ⎓)
Consumption		< 5.4 W at 20 °C and max. voltage

References of switches with locking on energization and unlocking on de-energization

To order a safety interlock switch with locking on energization and unlocking on de-energization of the solenoid, replace the fifth number in the selected reference with **5**.
For these models, the auxiliary contact states are represented with key inserted and solenoid energized.
Example: XCSLF373731M3 becomes **XCSLF373751M3**. Some references with locking on energization may not be available.

References of actuating keys and separate parts

See page 64.

(1) Head adjustable in 90° steps through 360°. Blanking plug for operating head slot included with switch.
(2) A key-operated lock (two keys included with switch) enables forced opening of the interlocking mechanism by authorized personnel, allowing withdrawal of the actuating key and subsequent opening of the NC safety contacts (auxiliary release).
(3) Actuating keys to be ordered separately (see page 64).
(4) Common power supply for the solenoid and the LEDs.

Note : Due to existing cable connections and to increase your personal safety, safety screws have been used on the front of the product to help prevent unauthorized access.

Other versions: consult your Customer Care Center.

Safety detection solutions

Safety interlock switches

Key-operated with solenoid, turret head *(1)*
XCSLF metal, emergency release pushbutton,
3 cable entries

Type of switch	**Locking on de-energization and unlocking on energization of solenoid** *(2)* **with emergency release by mushroom head pushbutton** *(3)*	
		
LED indication	Orange LED: "guard open" indication Green LED: "guard closed and locked" indication	
Power supply for the solenoid and the LEDs	24 V ⎓ or ∿ (50/60 Hz on ∿)	
Type of auxiliary contact actuated by the solenoid (locking contacts). Contact states represented with actuating key inserted and solenoid not energized.	1 NC + 2 NO break before make 61 43 53 62 44 54	2 NC + 1 NO break before make 41 51 63 42 52 64

References of switches without actuating key *(4)* (⊖ NC contact with positive opening operation)
Types of main contact actuated by the key
Contact states represented with actuating key inserted with trigger action mushroom head pushbutton, diameter 40 mm, "turn to release" reset
With 3 entries tapped ISO M20 x 1.5

3-pole contact **1 NC + 2 NO** break before make, slow break 21 13 33 22 14 34	**XCSLF3535412** ⊖	–
3-pole contact **2 NC + 1 NO** break before make, slow break 21 31 13 22 32 14	–	**XCSLF3737412** ⊖
Weight (kg)	1.220	1.220

Solenoid and LED characteristics

Load factor		100%
Rated operational voltage *(5)*		24 V ⎓ or ∿ or 120 V ∿ or 230 V ∿
Voltage limits	Conforming to EN/IEC 60947-1	- 15%, + 10% of the rated operational voltage (including ripple on ⎓)
Consumption		< 5.4 W at 20 °C and max. voltage

References of switches with trigger action mushroom head pushbutton, diameter 40 mm, key no. 455 reset

To order a switch with trigger action mushroom head pushbutton, key no. 455 release, diameter 40 mm at the rear of the product, replace the fifth number in the selected reference with **6**.
Example: XCSLF3535412 becomes **XCSLF3535612.** Some references with trigger action mushroom head pushbutton may not be available.

References of complete switches with solenoid supply voltage of 120 V or 230 V

To order a switch with a solenoid voltage of 110/120 V ∿, replace the sixth number in the selected reference with **3**.
To order a switch with a solenoid voltage of 220/240 V ∿, replace the sixth number in the selected reference with **4**.
Some 110/120V ∿ and 220/240V ∿ references may not be available.

References of complete switches with 3 cable entries tapped for 1/2" NPT conduit

To order a switch with 3 1/2" NPT cable entries, replace the last number in the reference with **3**.
Example: XCSLF3737412 becomes **XCSLF3737413**. Some 1/2" NPT references may not be available.

References of actuating keys and separate parts

See page 64.

(1) Head adjustable in 90° steps through 360°. Blanking plug for operating head slot included with switch.
(2) A key-operated lock (2 keys included with switch) enables forced opening of the interlocking mechanism by authorized personnel, allowing withdrawal of the actuating key and subsequent opening of the NC safety contacts (auxiliary release).
(3) Trigger action, diameter 40 mm, "turn to release" or "key no. 455" reset type.
(4) Actuating keys to be ordered separately (see page 64).
(5) Common power supply for the solenoid and the LEDs.

Other versions: consult your Customer Care Center.

Safety detection solutions

Safety interlock switches

Key-operated with solenoid, turret head *(1)*
XCSLF metal, emergency release pushbutton, connector output

Type of switch	**Locking on de-energization and unlocking on energization of solenoid** *(2)* **with emergency release by mushroom head pushbutton** *(3)*	

LED indication	Orange LED: "guard open" indication Green LED: "guard closed and locked" indication	
Power supply for the solenoid and the LEDs	24 V ⎓ or ∿ (50/60 Hz on ∿)	
Type of auxiliary contact actuated by the solenoid (locking contacts). Contact states represented with actuating key inserted and solenoid not energized.	1 NC + 2 NO break before make 	2 NC + 1 NO break before make 

References of switches without actuating key *(4)* (➔ NC contact with positive opening operation)
Types of main contact actuated by the key
Contact states represented with actuating key inserted with trigger action mushroom head pushbutton, diameter 40 mm, "turn to release" reset
With 19-pin (6 contacts) M23 connector output

3-pole contact **1 NC + 2 NO** break before make, slow break 	**XCSLF353541M3** ➔	–
3-pole contact **2 NC + 1 NO** break before make, slow break 	–	**XCSLF373741M3** ➔
Weight (kg)	1.220	1.220

Solenoid and LED characteristics

Load factor		100%
Rated operational voltage *(5)*		24 V ⎓ or ∿
Voltage limits	Conforming to EN/IEC 60947-1	- 15%, + 10% of the rated operational voltage (including ripple on ⎓)
Consumption		< 5.4 W at 20 °C and max. voltage

References of actuating keys and separate parts

See page 64.

(1) Head adjustable in 90° steps through 360°. Blanking plug for operating head slot included with switch.
(2) A key-operated lock (two keys included with switch) enables forced opening of the interlocking mechanism by authorized personnel, allowing withdrawal of the actuating key and subsequent opening of the NC safety contacts (auxiliary release).
(3) Trigger action, diameter 40 mm, "turn to release".
(4) Actuating keys to be ordered separately (see page 64).
(5) Common power supply for the solenoid and the LEDs.

Note : Due to existing cable connections and to increase your personal safety, safety screws have been used on the front of the product to help prevent unauthorized access.

Other versions: consult your Customer Care Center.

Safety detection solutions

Safety interlock switches

Key-operated with solenoid, turret head *(1)*
XCSLE plastic, double insulated, 3 cable entries

Type of switch	Locking on de-energization and unlocking on energization of solenoid *(2)*				
					
LED indication	Orange LED: "guard open" indication Green LED: "guard closed and locked" indication				
Power supply for the solenoid and the LEDs	24 V ⎓ or ∿ (50/60 Hz on ∿)				
Type of auxiliary contact actuated by the solenoid (locking contacts). Contact states represented with actuating key inserted and solenoid not energized.	1 NO + 1 NC break before make 	2 NC simultaneous 	1 NC + 2 NO break before make 	2 NC + 1 NO break before make 	3 NC simultaneous

References of switches without actuating key *(3)* (⊖ NC contact with positive opening operation)
Types of main contact actuated by the key
Contact states represented with actuating key inserted
With 3 cable entries tapped ISO M20 x 1.5

2-pole contact **1 NC + 1 NO** break before make, slow break		**XCSLE2525312** ⊖	–	–	–	–
2-pole contact **2 NC** simultaneous, slow break		–	**XCSLE2727312** ⊖	–	–	–
3-pole contact **1 NC + 2 NO** break before make, slow break		–	–	**XCSLE3535312** ⊖	–	–
3-pole contact **2 NC + 1 NO** break before make, slow break		–	–	–	**XCSLE3737312** ⊖	–
3-pole contact **3 NC** simultaneous, slow break		–	–	–	–	**XCSLE3838312** ⊖
Weight (kg)		0.530	0.530	0.530	0.530	0.530

Solenoid and LED characteristics

Load factor		100%
Rated operational voltage *(4)*		24 V ⎓ or ∿ or 120 V ∿ or 230 V ∿
Voltage limits	Conforming to EN/IEC 60947-1	- 15%, + 10% of the rated operational voltage (including ripple on ⎓)
Consumption		< 5.4 W at 20 °C and max. voltage

References of complete switches with solenoid supply voltage of 120 V or 230 V

To order a switch with a solenoid voltage of 110/120 V ∿, replace the sixth number in the selected reference with **3**.
Example: XCSLE2525312 becomes **XCSLE2525332**. Some 110/120 V ∿ references may not be available.
To order a switch with a solenoid voltage of 220/240 V ∿, replace the sixth number in the selected reference with **4**.
Example: XCSLE2525312 becomes **XCSLE2525342**. Some 220/240 V ∿ references may not be available.

References of switches with locking on energization and unlocking on de-energization

To order a safety interlock switch with locking on energization and unlocking on de-energization of the solenoid, replace the fifth number in the selected reference with **5**.
Example: XCSLE2525312 becomes **XCSLE2525512**. Some references with locking on energization may not be available.

References of complete switches with three cable entries tapped for 1/2" NPT conduit

To order a switch with 1/2" NPT cable entries, replace the last number in the reference with **3**.
Example: XCSLE2727312 becomes **XCSLE2727313.** Some 1/2" NPT references may not be available.

References of actuating keys and separate parts

See page 64.

(1) Head adjustable in 90° steps through 360°. Blanking plug for operating head slot included with switch.
(2) A special tool included with the safety interlock switch enables forced opening of the interlocking mechanism by authorized personnel, allowing withdrawal of the actuating key and subsequent opening of the NC safety contacts (auxiliary release).
(3) Actuating keys to be ordered separately (see page 64).
(4) Common power supply for the solenoid and the LEDs.

Other versions: consult your Customer Care Center.

Presentation: page 54 | Characteristics: page 55 | Dimensions: page 65 | Schemes: page 68

Safety detection solutions

Safety interlock switches

Key-operated with solenoid, turret head *(1)*
XCSLE plastic, double insulated, connector output

Type of switch	Locking on de-energization and unlocking on energization of solenoid *(2)*	
		
LED indication	Orange LED: "guard open" indication Green LED: "guard closed and locked" indication	
Power supply for the solenoid and the LEDs	24 V ⎓ or ∿ (50/60 Hz on ∿)	
Type of auxiliary contact actuated by the solenoid (locking contacts). Contact states represented with actuating key inserted and solenoid not energized.	1 NC + 2 NO break before make 	2 NC + 1 NO break before make 
References of switches without actuating key *(3)* (⊖ **NC contact with positive opening operation)** **Types of main contact actuated by the key** **Contact states represented with actuating key inserted** **With 16-pin (4 contacts) or 19-pin (6 contacts) M23 connector output**		
3-pole contact **1 NC + 2 NO** break before make, slow break 	**XCSLE353531M3** ⊖	–
3-pole contact **2 NC + 1 NO** break before make, slow break 	–	**XCSLE373731M3** ⊖
Weight (kg)	0.530	0.530

Solenoid and LED characteristics		
Load factor		100%
Rated operational voltage *(4)*		24 V ⎓ or ∿
Voltage limits	Conforming to EN/IEC 60947-1	- 15%, + 10% of the rated operational voltage (including ripple on ⎓)
Consumption		< 5.4 W at 20 °C and max. voltage

References of actuating keys and separate parts

See page 64.

(1) Head adjustable in 90° steps through 360°. Blanking plug for operating head slot included with switch.
(2) A special tool included with the safety interlock switch enables forced opening of the interlocking mechanism by authorized personnel, allowing withdrawal of the actuating key and subsequent opening of the NC safety contacts (auxiliary release).
(3) Actuating keys to be ordered separately (see page 64).
(4) Common power supply for the solenoid and the LEDs.

Note : Due to existing cable connections and to increase your personal safety, safety screws have been used on the front of the product to help prevent unauthorized access.

Other versions: consult your Customer Care Center.

Safety detection solutions

Safety interlock switches

Key-operated with solenoid, turret head
XCSLF metal and XCSLE plastic
Accessories

References of actuating keys




Description	Straight actuating key	Actuating key with wide fixing	Pivoting actuating key	Latch for sliding doors
For XCSLF and XCSLE key-operated switches	**XCSZ01**	**XCSZ02**	**XCSZ03**	**XCSZ05**
Weight (kg)	0.020	0.020	0.095	0.600

Separate parts

PF090313

XCSZ90

Description	Used for	Unit reference	Weight kg
Blanking plugs for operating head slot (Sold in lots of 10)	XCSLF, XCSLE	**XCSZ30**	0.050
Keys for forced opening of interlocking device (Sold in lots of 10)	XCSLF	**XCSZ25**	0.100
Padlocking device to help prevent insertion of actuating key, for up to 3 padlocks (padlocks not included)	XCSLF, XCSLE	**XCSZ90**	0.055
Tool for forced opening of interlocking device (Sold in lots of 10)	XCSLE	**XCSZ100**	0.050
Cover safety kit consisting of: ■ 4 x 5-lobe torque screws ■ 1 magnetic screwdriver bit	XCSLF	**XCSZ210**	0.020
	XCSLE	**XCSZ211**	0.020

Characteristics

M23 connectors

Type of connection	Screw thread (metal clamping ring)
Degree of protection	IP 65 (with clamping ring correctly tightened)
Ambient air temperature	-25…+110 °C
Connection	To solder terminals. Maximum conductor c.s.a.: 1 mm^2 Cable gland: no. 13 metal (Pg 13.5) Clamping capacity: 9 to 12 mm
LED signaling	–
Nominal voltage	60 V ∿, 75 V ⎓
Nominal current	7.5 A
Insulation resistance	> 10^{12} Ω
Contact resistance	≤ 5 mΩ

References

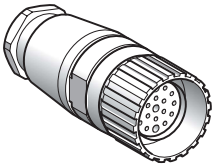

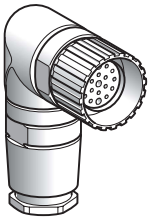

Type of connector	Number of contacts	Cable connection	Type	Reference	Weight kg
Female, M23	19	To solder terminals	Straight	**XZCC23FDM190S**	0.080
			Elbowed	**XZCC23FCM190S**	0.150

Dimensions

XZCC23FDM190S

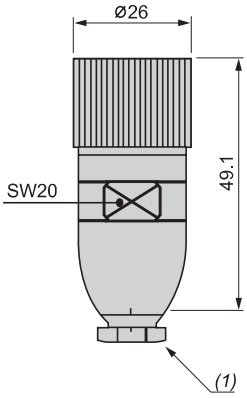

XZCC23FCM190S

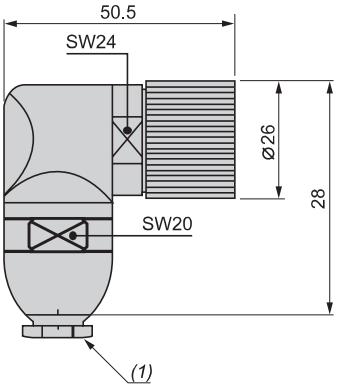

(1) No. 13 metal cable gland

Connections

XZCC23F●M190S

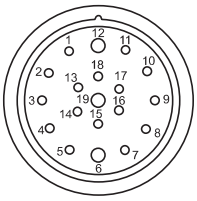

Safety detection solutions

Safety interlock switches

Key-operated with solenoid, turret head
XCSLF metal
XCSLE plastic

Dimensions

Metal safety interlock switches

XCSLF●●●●●●●

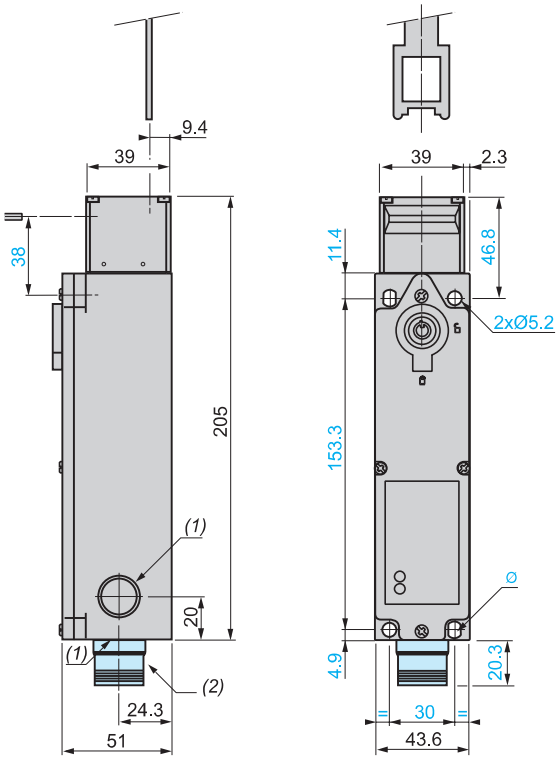

Ø: 2 elongated holes Ø 7 x 5.2

XCSLF●●●●●●●, with emergency release mushroom head pushbutton

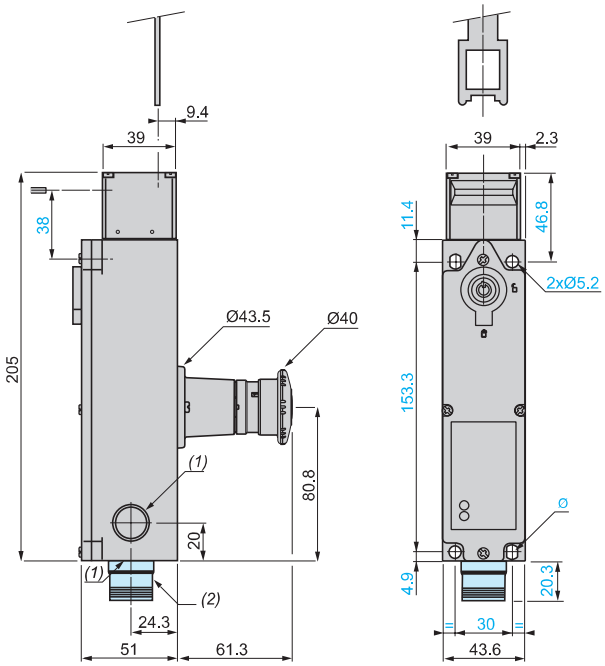

Ø: 2 elongated holes Ø 7 x 5.2

Plastic safety interlock switches

XCSLE●●●●●●●

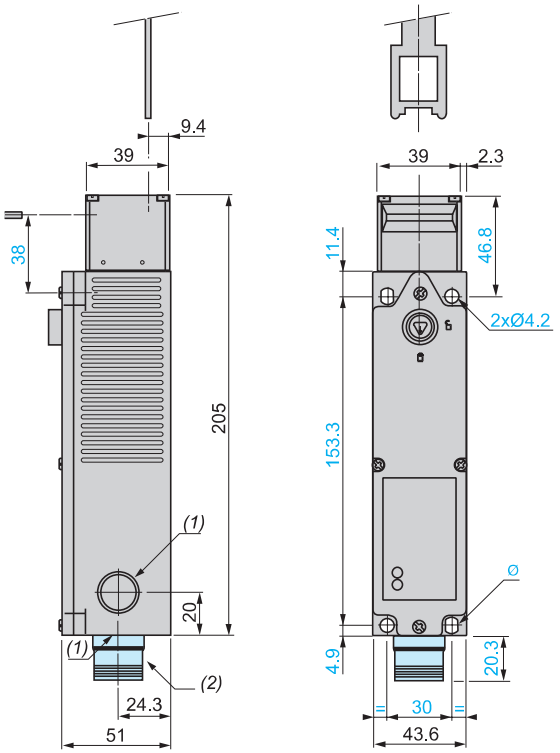

Ø: 2 elongated holes Ø 6.2 x 4.2

(1) 3 tapped entries for cable gland.
(2) Version with M23 connector.

Safety detection solutions

Safety interlock switches

Key-operated with solenoid, turret head
XCSLF metal
XCSLE plastic

Dimensions (continued)

XCSZ01

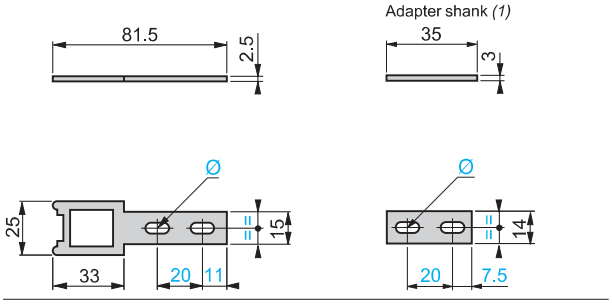

(1) Adapter (included with XCSZ01 actuating key) for replacing, without drilling an additional fixing hole, XCKJ or XCSL5/7 safety interlock switches with ZCKY07 actuating key by an XCSLF/LE safety interlock switch with XCSZ01 actuating key.

Ø: 2 elongated holes Ø 5.3 x 10

XCSZ02

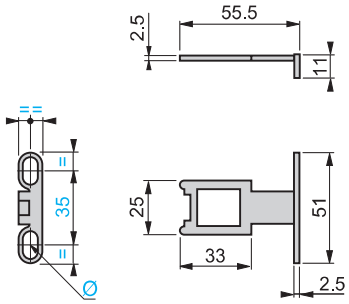

Ø: 2 elongated holes Ø 5.3 x 10

XCSZ03

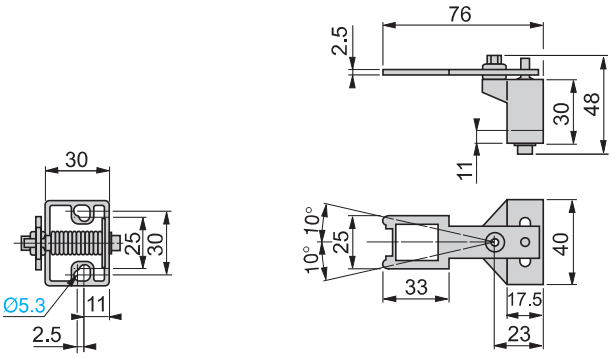

Fixing axis % related to actuating key.

XCSZ05

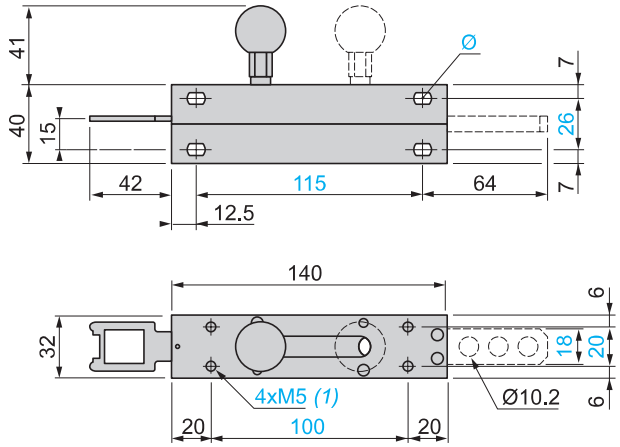

(1) Depth: 10
Ø: 4 elongated holes Ø 5.2 x 8

Actuation radius

XCSZ01

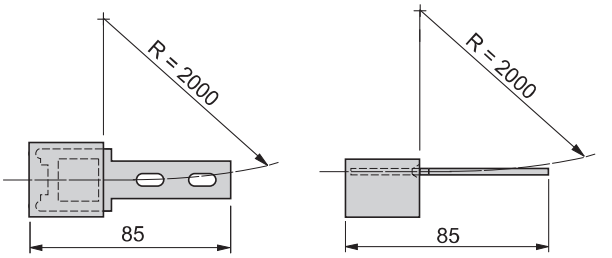

XCSZ02

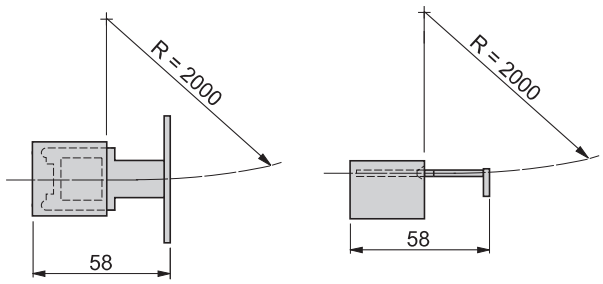

XCSZ03

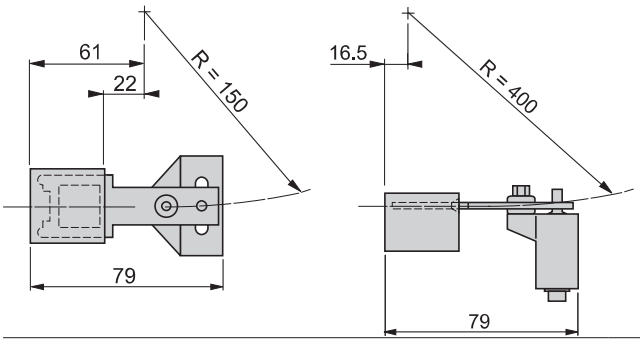

R = minimum radius

Safety detection solutions

Safety interlock switches

Key-operated with solenoid, turret head
XCSLF metal
XCSLE plastic

Operation

Functional diagrams

XCSLF25●●● XCSLE25●●●

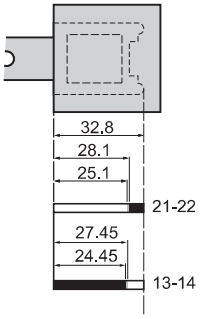

XCSLF27●●● XCSLE27●●●

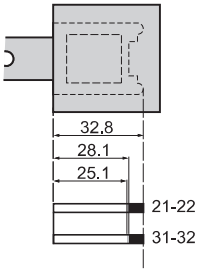

XCSLF35●●● XCSLE35●●●

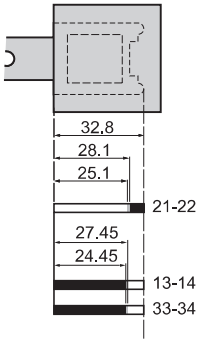

XCSLF37●●● XCSLE37●●●

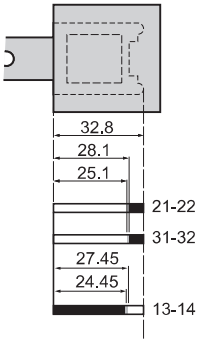

XCSLF38●●● XCSLE38●●●

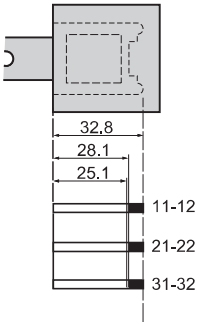

Contact operation
■ Closed □ Open Transient state

Connection examples

The contact states are represented with the actuating key inserted and the solenoid not energized

Note: These schemes are given as examples only, the designer should refer to the relevant safety standards for guidance.

Wiring up to PL=b, category 1 conforming to EN/ISO 13849-1
Wiring example with protection fuse to help prevent shunting of the NC contact, due to either cable damage or tampering

1 NC + 1 NO locking on de-energization and 1 NC + 1 NO auxiliary contacts

XCSLF25253●● and **XCSLE25253●●**

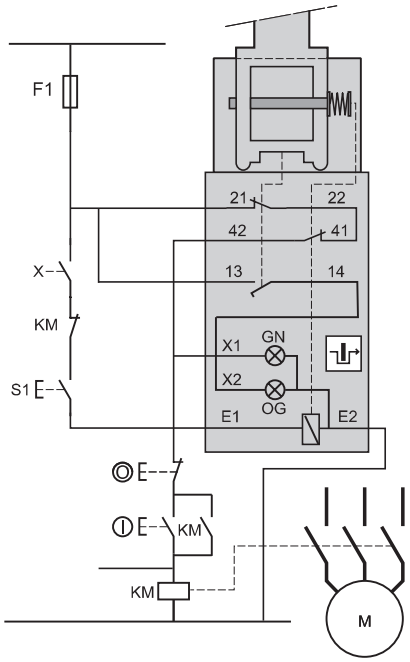

Wiring up to PL=d, category 3 conforming to EN/ISO 13849-1
Wiring example with redundancy for the safety interlock switch contacts, without monitoring or redundancy in the power circuit.

2 NC + 1 NO locking on de-energization and 2 NC + 1 NO auxiliary contacts

XCSLF37373●● and **XCSLE37373●●**

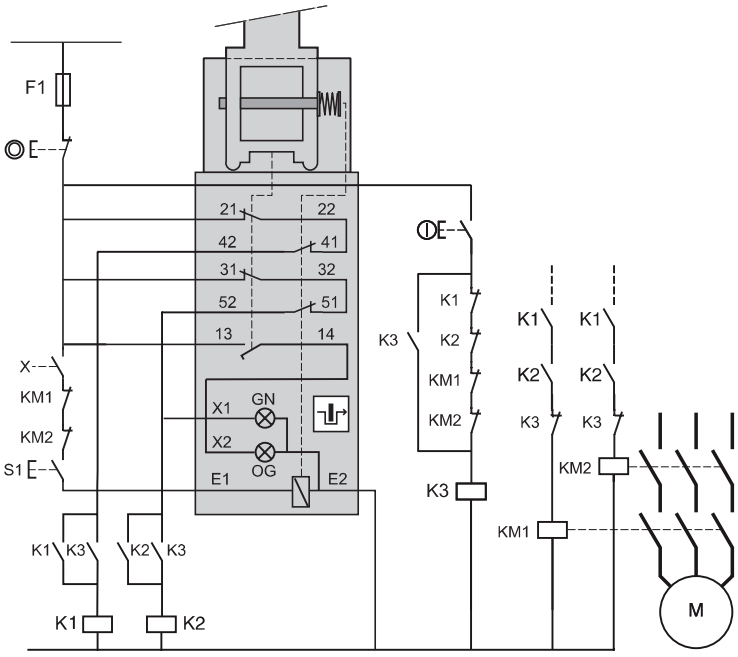

E1-E2: Solenoid supply
21-22: Safety contact, key position monitoring
13-14: Safety contact, key position signaling
41-42: Solenoid position monitoring contact
13-X2/E2: LED (orange): key withdrawn
41-X1/E2: LED (green): key inserted and locked
22-41 : Safety pre-wiring mandatory
S1: Manual release button
X: Unlocking signal

E1-E2: Solenoid supply
21-22 and 31-32: Redundant safety contacts, key position monitoring
41-42 and 51-52: Redundant contacts, solenoid position monitoring
13-14: Safety contact, key position signaling
13-X2/E2: LED (orange): key withdrawn
51-X1/E2: LED (green): key inserted and locked
22-41 and 32-51: Safety pre-wiring mandatory
S1: Manual release button
X: Zero speed or unlocking signal

Connection examples (continued)

The contact states are represented with the actuating key inserted and the solenoid not energized.

Wiring up to PL=e, category-4 conforming to EN/ISO 13849-1 and EN/IEC 62061 (assuming that failure of the single mechanical point can be excluded)

Wiring example with 2-LED module associated with an XPSUA● *(1)* safety control unit

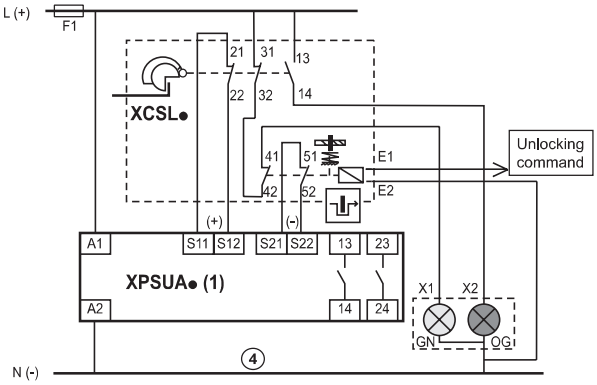

(1) XPSUAF● /XPSUAK● /XPSUAT●

Wiring to PL=e, category 4 conforming to EN/ISO 13849-1 and SIL CL3 conforming to EN/IEC 62061. Wiring method used in conjunction with an XPS safety control unit (the safety interlock switch should be used in conjunction with a safety limit switch to achieve electrical/mechanical redundancy).

Method for machines with long rundown time (high inertia)

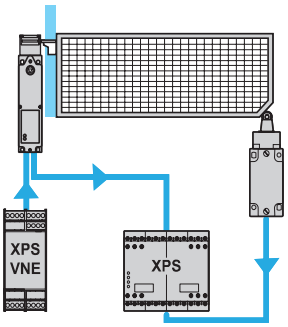

Interlocking device for actuating key fitted on guard and zero speed detection.

E1-E2: Solenoid supply
13-14: Safety contact, key position signaling
13-X2/E2: LED (orange): key not inserted
41-X1/E2: LED (green): key inserted and locked
21-22 and 31-32: Redundant safety contacts, key position monitoring
41-42 and 51-52: Redundant contacts, solenoid position monitoring

19-pin M23 connectors

XCSLF3535●● and XCSLE3535●●

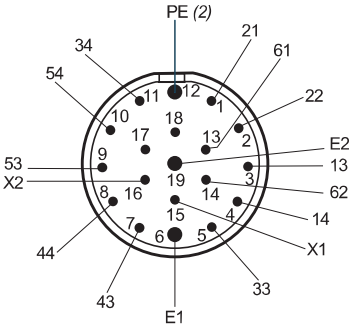

XCSLF3737●● and XCSLE3737●●

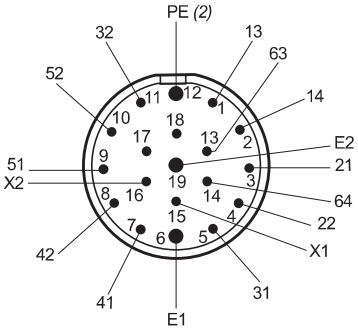

XCSLF3837●● and XCSLE3837●●

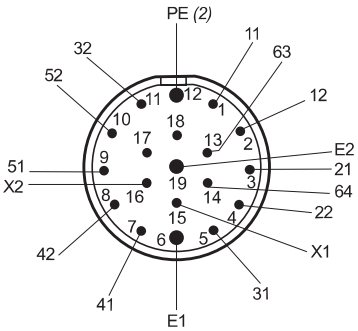

XCSLF3838●● and XCSLE3838●●

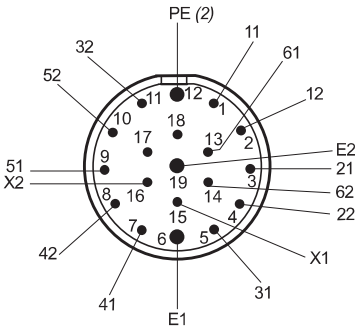

(2) PE (Protective Earth) connection